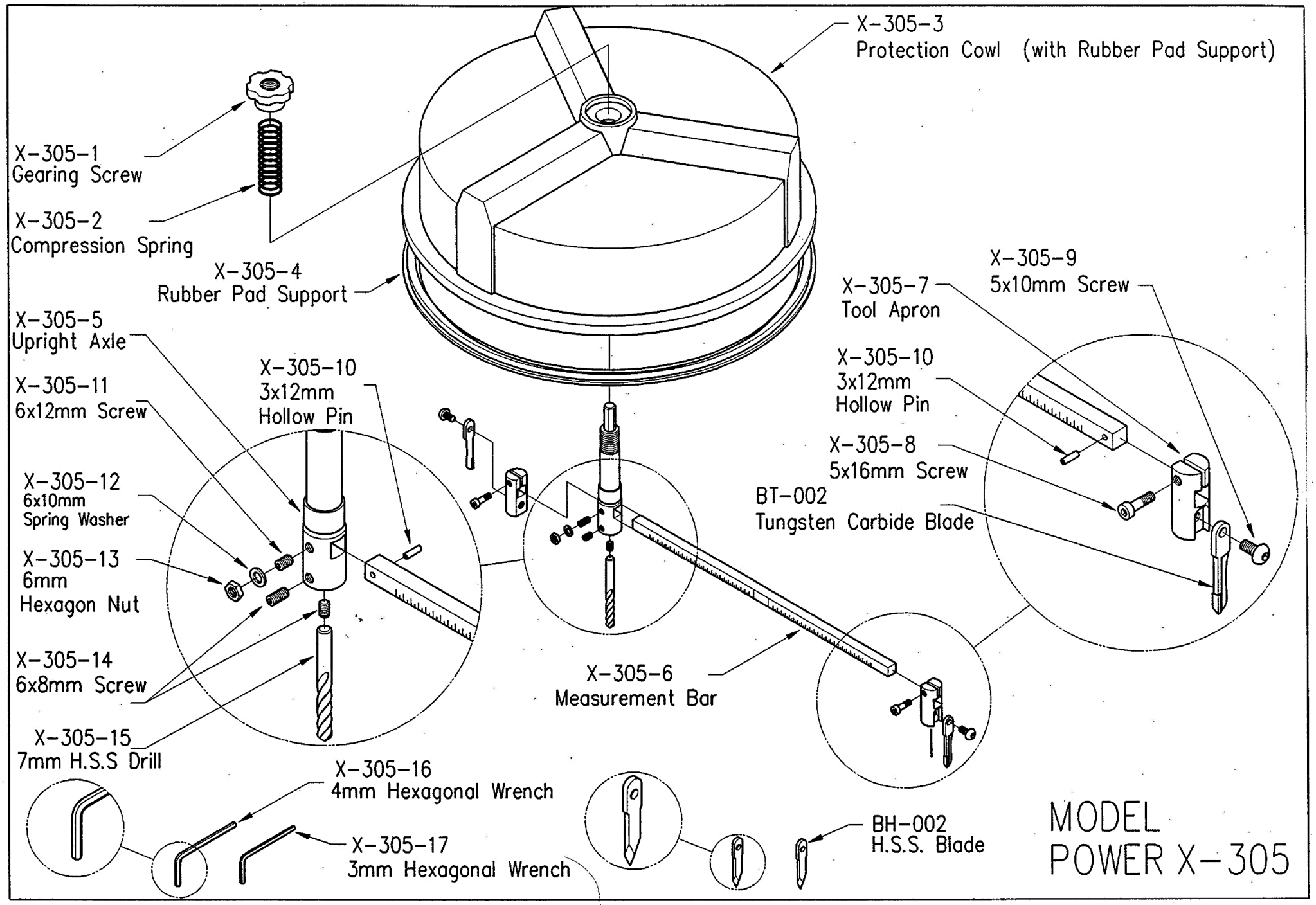
X-305-3
Protection Cowl (with Rubber Pad Support)
X-305-1
Gearing Screw
X-305-2
Compression Spring
X-305-4
Rubber Pad Support
X-305-5
Upright Axle
X-305-11
6x12mm Screw
X-305-10
3x12mm
Hollow Pin
X-305-12
6x10mm
Spring Washer
X-305-13
6mm
Hexagon Nut
X-305-14
6x8mm Screw
X-305-15
7mm H.S.S Drill
X-305-7
Tool Apron
X-305-9
5x10mm Screw
X-305-10
3x12mm
Hollow Pin
X-305-8
5x16mm Screw
BT-002
Tungsten Carbide Blade
X-305-6
Measurement Bar
X-305-16
4mm Hexagonal Wrench
X-305-17
3mm Hexagonal Wrench
BH-002
H.S.S. Blade
MODEL
POWER X-305